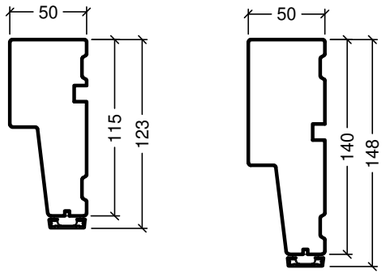

Frame variants outward opening doors

(3014.2233)

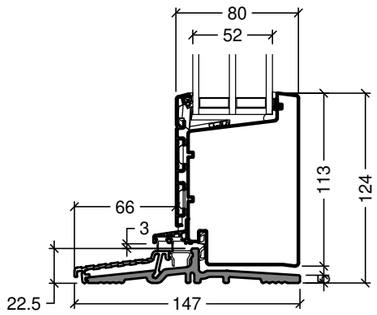

Inward opening

(3014.2298)

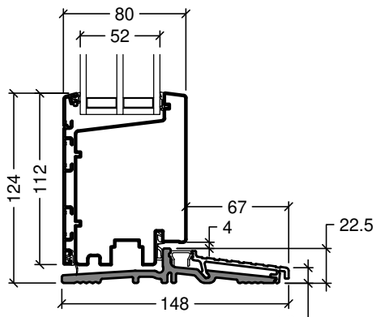

Outward opening

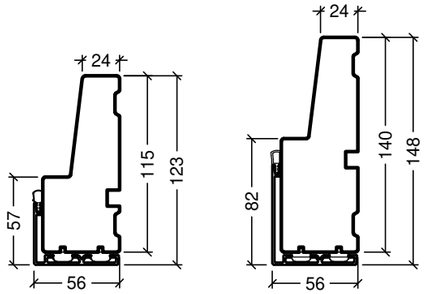

Frame variants inward opening doors

(3014.3436)

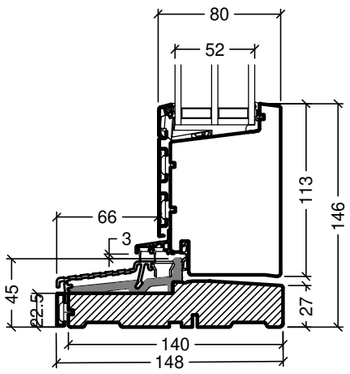

Hardwood inward opening

(3014.2297)

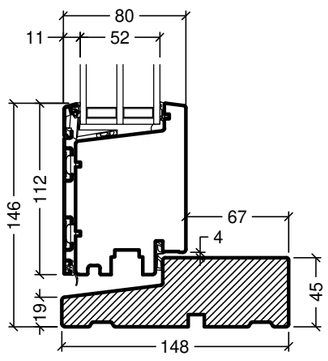

Hardwood outward opening

rationel® Rationel is a trademark of DOVISTA A/S	System: Auraplus alu glazed door English: Frame and treshold variants Dansk: Karm- og rammevarianter	Scale: 1:4 Edition No. 1 10.21 © 2021